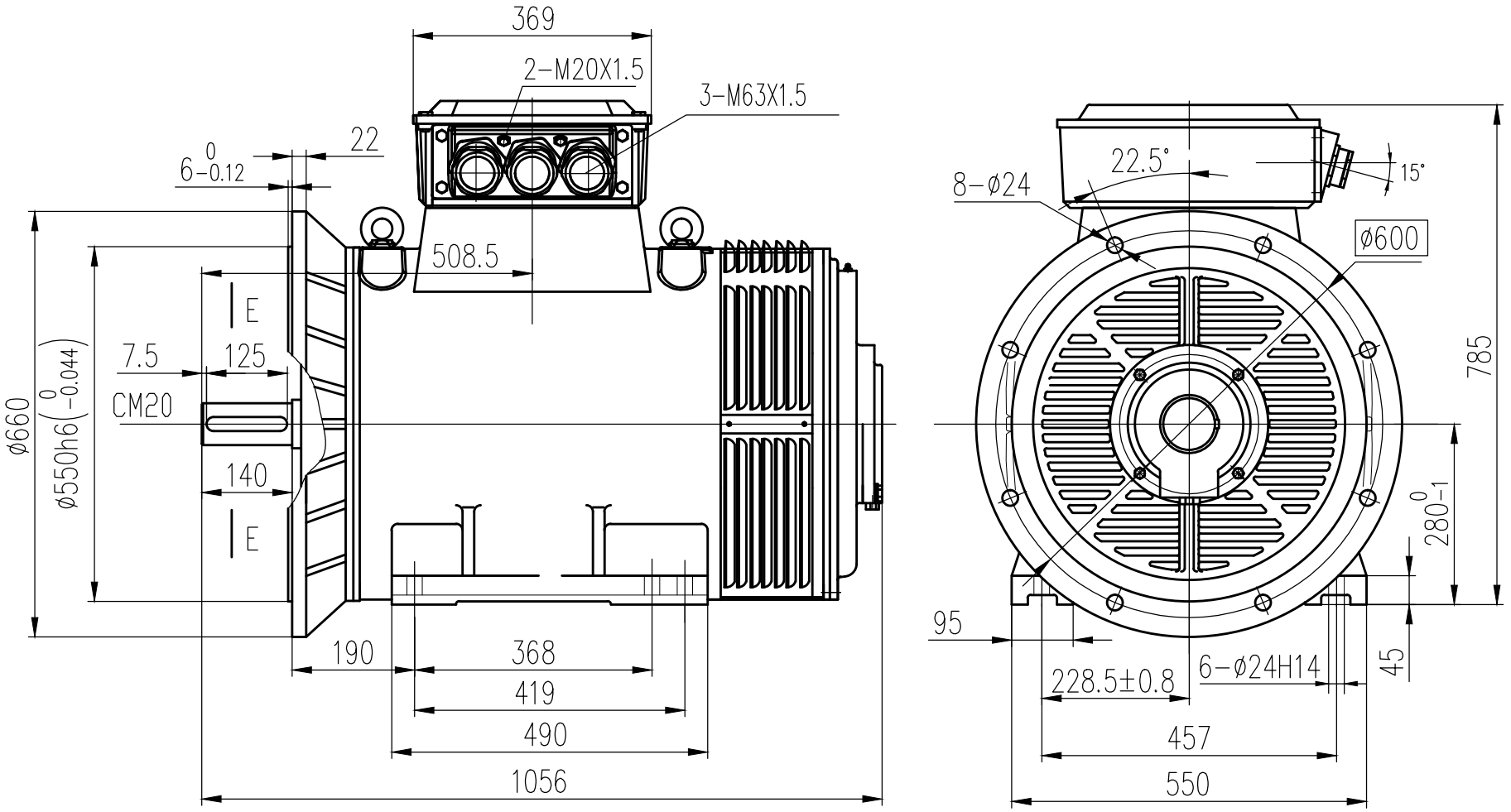

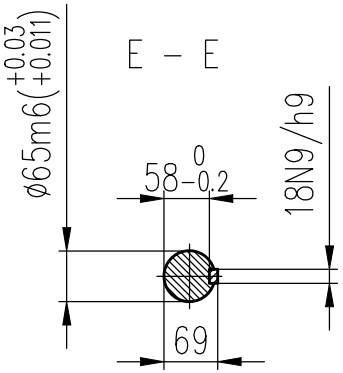

Mark	No.	Zone	Changed file No.	Signatuce	Data

Design			Standard		
Check					
Auditing					
Technics			Approvil		

Sign	Weight	Scale
		1:9
Total page	page No.	

OMD3-280M-02P B35

Wuxi OMEC LTD.